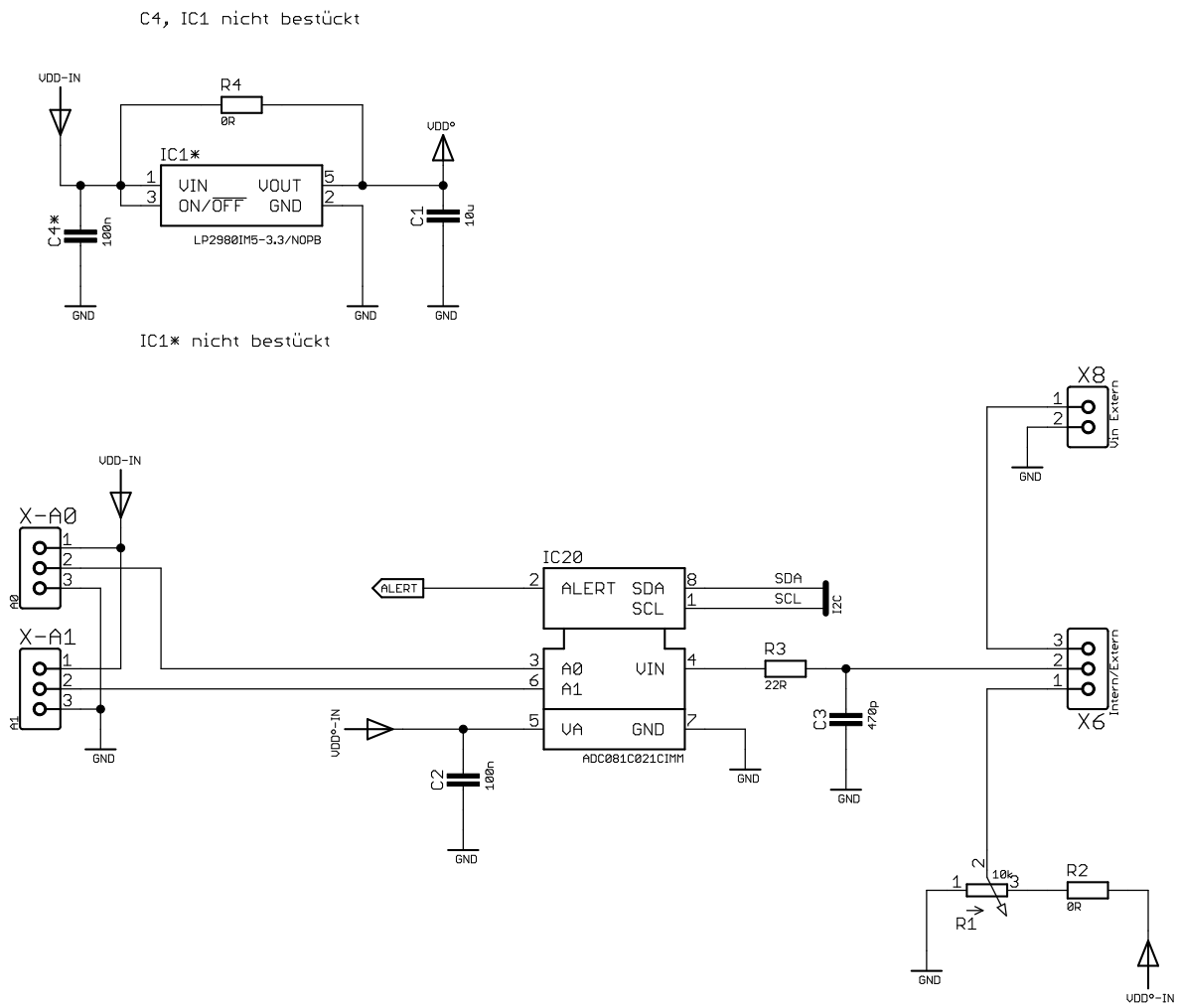

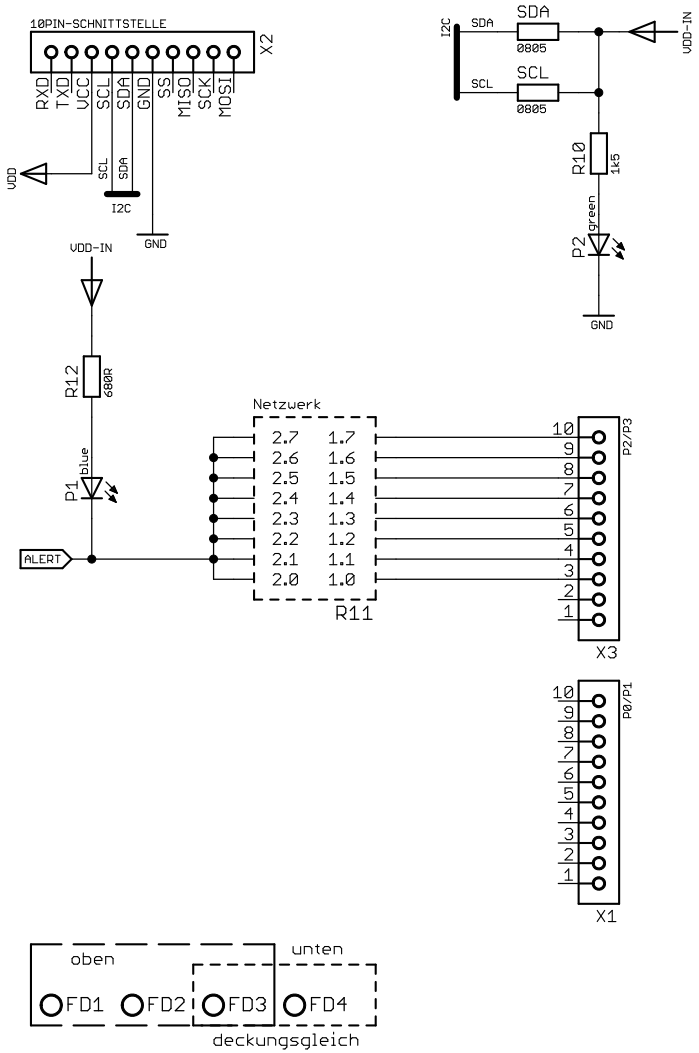

TITLE: I2C-004 - ADC_TI ADC081C021_8bit_V1-0

Document Number:

REV: **1.0**

Date: 13.06.13 21:04

Sheet: 1/1